U.S.S.R. BOMBLET, FRAG, AO-2.5

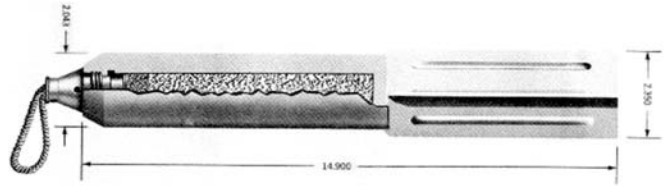

Ordnance used with:
AGM 1, BOMB, NOSE
AGM 3, BOMB, NOSE
AM B, BOMB, NOSE
AM B B/V, BOMB, NOSE
TM-4A, NOSE, MT
RBK-250, CLUSTER, ADAPTER
RBK-500, DISPENSER (OLD STYLE)

N.E.W. 0.09 KG

U.S. UNDESIGNATED STAINLESS STEEL ROD ASSEMBLY, INERT, LARGE

Ordnance used with:
SUU-66/B, DISPENSER (WCMD)
CBU-107/B PASSIVE ATTACK WEAPON (PAW)

N.E.W. 0.00 G

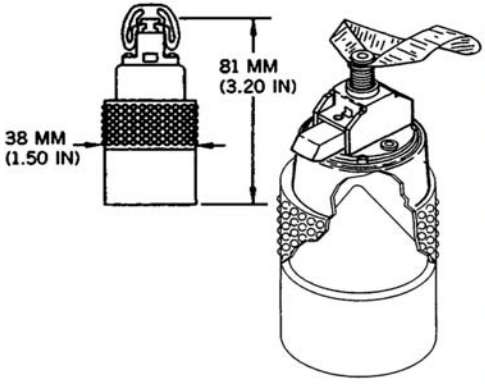

IRAQI GRENADE, DUAL-PURPOSE, MODEL UNKNOWN

N.E.W. 35.00 G

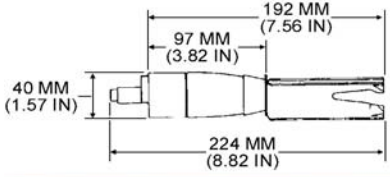

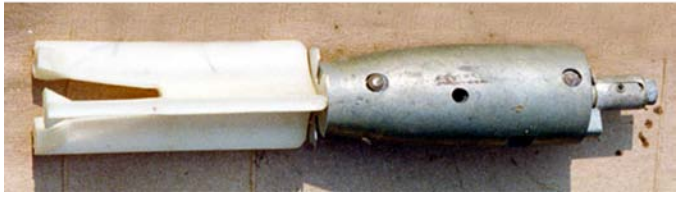

U.S. BOMB UNIT, APERS, HEAT, BLU-77/B

Ordnance used with:
MK 7 MOD 2, DISPENSER
MK 7 MOD 3, DISPENSER
MK 7 MOD 4, DISPENSER
MK 7 MOD 6, DISPENSER
APAM CLUSTER WEAPON
CBU-59/B
FMU-88/B, BOMB, IMPACT

N.E.W. 2.25 OZ

CHILEAN BOMB, HEAT, PM-2

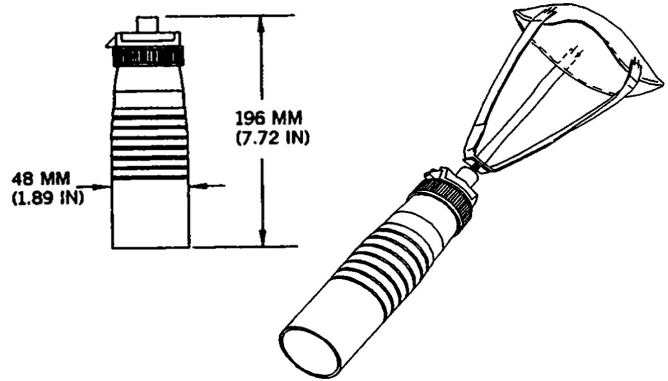

Ordnance used with:
CB-500 K-2, CLUSTER BOMB, 485 KG

N.E.W. 153.00 G

CHILEAN BOMB, AV/AT, PM-1

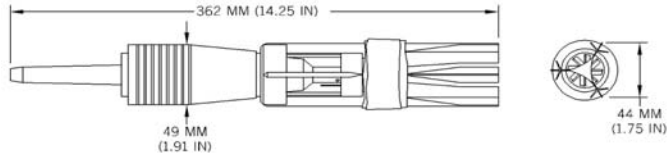

Ordnance used with:
CB-250-K, CLUSTER BOMB
CB 500, CLUSTER BOMB, 245 KG
CB 500-K, CLUSTER BOMB, 500 KG
CBU, NAAMAN-500

N.E.W. 257.00 G

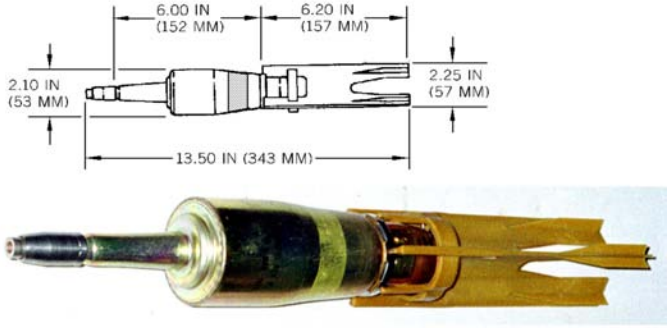

U.S. BOMB, HEAT/FRAG, MK 118 MODS 0 & 1

Ordnance used with:
MK 7 MOD 2, DISPENSER
MK 7 MOD 3, DISPENSER
MK 7 MOD 4, DISPENSER
MK 7 MOD 6, DISPENSER
GRM, CLUSTER, GUIDED ROCKEYE MUNITION
MK 20 MOD 2 CBU
MK 20 MOD 3 CBU

N.E.W. 175.00 G

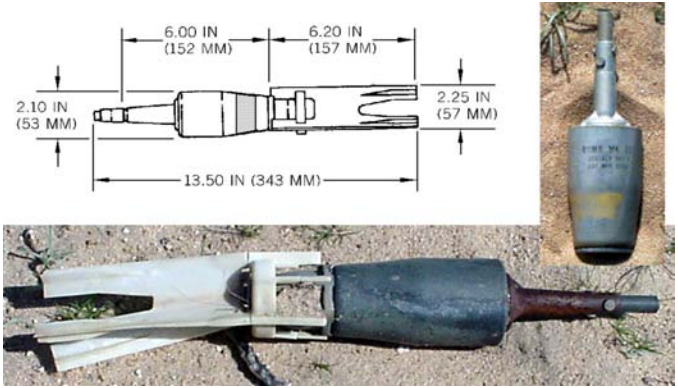

U.S. BOMB, HEAT/FRAG, VECP MODIFIED

Ordnance used with:
MK 7 MOD 2, DISPENSER
MK 7 MOD 3, DISPENSER
MK 7 MOD 4, DISPENSER
MK 7 MOD 6, DISPENSER
MK 20 MOD 4 CBU
KMU-388/B, LASER GUIDANCE KIT,
MK 96 MOD 0, ELECTRIC DETONATOR

N.E.W. 185.50 G

U.S.S.R. BOMB, HEAT/FRAG, PTAB-2.5KO

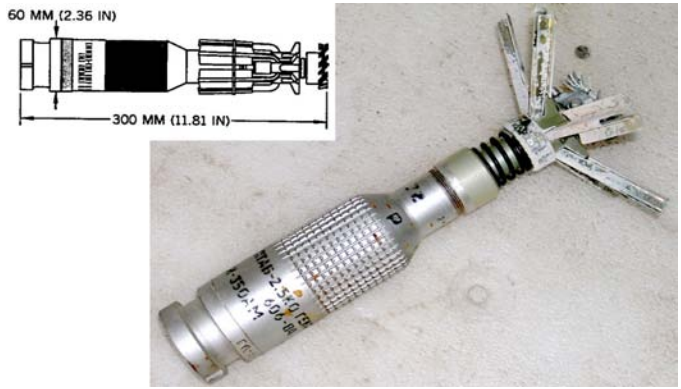

Ordnance used with:
KMGU
KMGU-2, DISPENSER, CAPTIVE
I-351A, IMPACT
I-351AM, IMPACT, SD
BKF PTAB-2.5 KO, SUBM. CONT. UNIT, BOMB DISP., EXPENDABLE

N.E.W. 200.00 G

U.K. LANDMINE, APERS, L10A1 (RANGER)

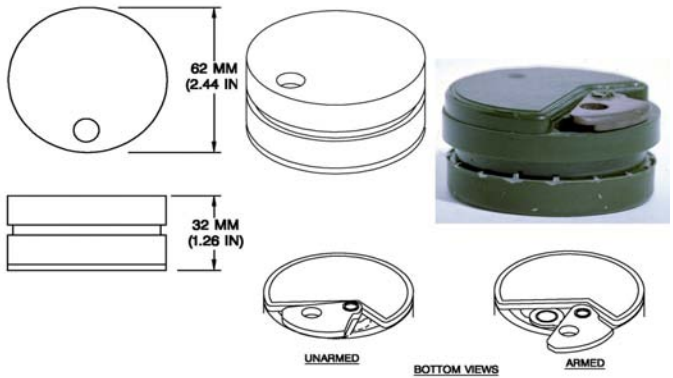

N.E.W. 10.00 G

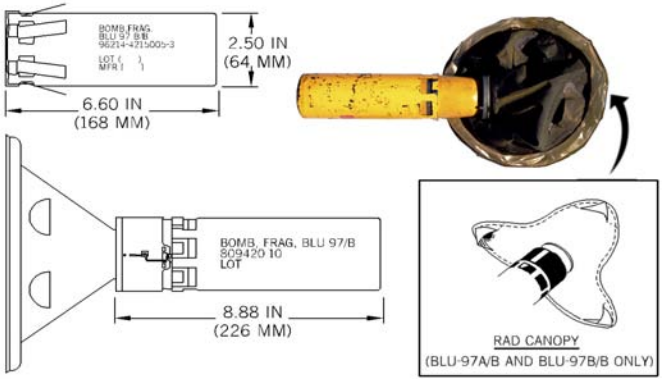

U.S. BOMB UNITS, LIVE, FRAG/HEAT, BLU-97/B, BLU-97A/B, AND BLU-97B/B; BOMB UNITS, TRAINING, BLU-97(T-1)/B, BLU-97(T-1)A/B,

Ordnance used with:
SUU-65/B, DISPENSER
MK 10 MOD 0, MISSILE CAN. SYS (USED IN MK 44 MOD 2 (ABLS))
RGM-109D-3, GUIDED MISSILE, SURF-TO-SURF (TOMAHAWK)
RGM-109D-31, GUIDED MISSILE, SURF-TO-SURF (TOMAHAWK)
RGM-109D-4, GUIDED MISSILE, SURF-TO-SURF (TOMAHAWK)
RGM-109D-41, GUIDED MISSILE, SURF-TO-SURF (TOMAHAWK)
UGM-109D-1, GUIDED MISSILE, SUB-TO-SURF (TOMAHAWK)

N.E.W. 13.00 OZ

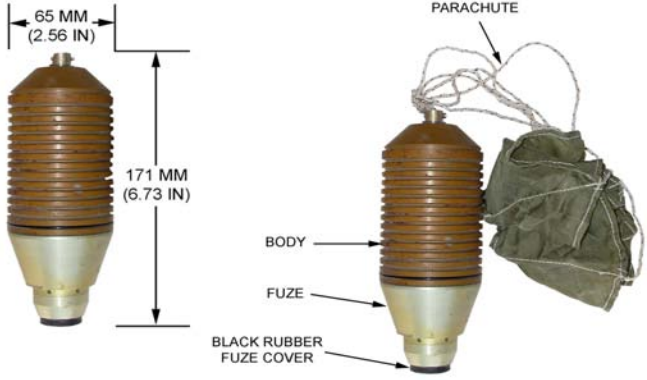

FRENCH GRENADE, HE, FRAG, GR-66-EG

Ordnance used with:
GDB, DISPENSER, 285 KG (BELOUGA)

N.E.W. 396.00 G

U.K. BOMB, HEAT/FRAG, NO. 2 MK 1 (BL-755)

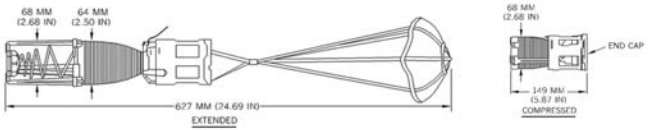

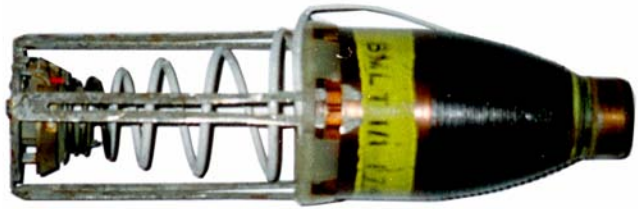

Ordnance used with:
NO. 1 MK 1, DISPENSER, HE, 600 LB (BL 755)
NO. 1 MK 2, DISPENSER, HE, 600 LB (BL 755)
NO. 1 MK 4, DISPENSER, HE, 600 LB (BL 755)
NO. 1A MK 1, DISPENSER, HE, 600 LB (BL-755)
NO. 1A MK 4, DISPENSER, HE, 600 LB (BL 755)
NO. 1 MK 3, DISPENSER, HE, 600 LB (BL 755)

FRENCH SUBMUNITION, 74-MM, HEAT, MODEL UNKNOWN

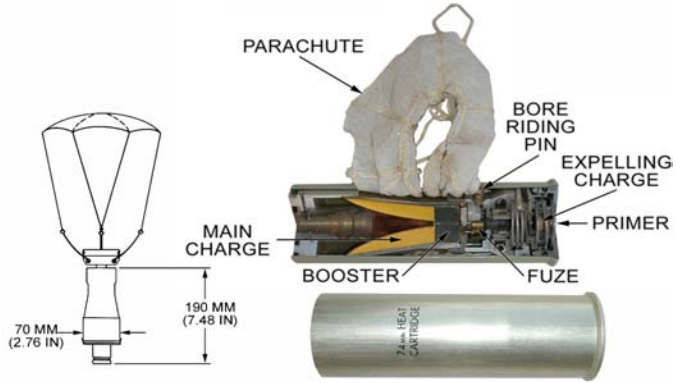

Ordnance used with:
ALKAN GROUND ATTACK CARTRIDGE LAUNCHER, TYPE 500
TYPE 500, DISPENSER (ALKAN)
ALKAN GROUND ATTACK CARTRIDGE LAUNCHER, TYPE 530
TYPE 530, DISPENSER (ALKAN)
ALKAN GROUND ATTACK CARTRIDGE LAUNCHER, TYPE 5030
TYPE 5030, DISPENSER (ALKAN)
ALKAN GROUND ATTACK CARTRIDGE LAUNCHER, TYPE 5050

U.K. BOMB, HEAT/FRAG, NO. 1 MK 1 (BL 755)

Ordnance used with:
NO. 1 MK 1, DISPENSER, HE, 600 LB (BL 755)
NO. 1 MK 2, DISPENSER, HE, 600 LB (BL 755)
NO. 1 MK 4, DISPENSER, HE, 600 LB (BL 755)
NO. 1A MK 1, DISPENSER, HE, 600 LB (BL-755)
NO. 1A MK 4, DISPENSER, HE, 600 LB (BL 755)
NO. 1 MK 3, DISPENSER, HE, 600 LB (BL 755)

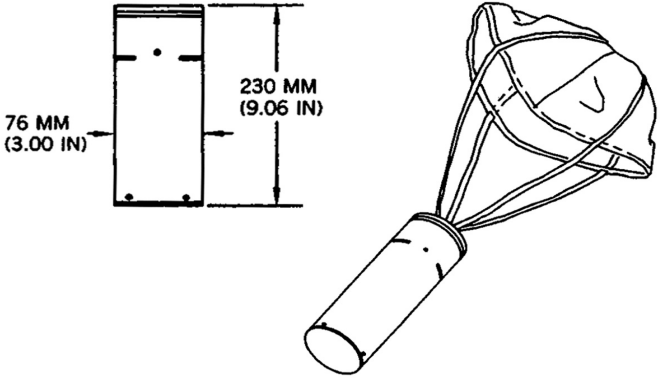

CHILEAN BOMBLET, AREA DENIAL, FRAG, INCENDIARY, PM-3

Ordnance used with:
CB 770, CLUSTER BOMB, 400 KG

N.E.W. 588.00 G

U.S. BOMB UNITS, BLU-63/B, BLU-63A/B, BLU-86/B AND BLU-86A/B; AND BOMB UNITS, TRAINING, BLU-63(T-1)/B; AND BLT(T-1)/B

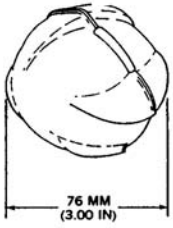

Ordnance used with:
GBU-2A/B
SUU-30B/B, DISPENSER
SUU-30H/B, DISPENSER
MGM-52C, GUIDED MISSILE, SURFACE-TO-SURFACE (LANCE)
CBU-71A/B
CBU-71/B
M219E1, FUZE, IMPACT FIRED

N.E.W. 113.00 G

BULGARIAN RADIO FREQUENCY JAMMERS, RO-045 AND RO-046

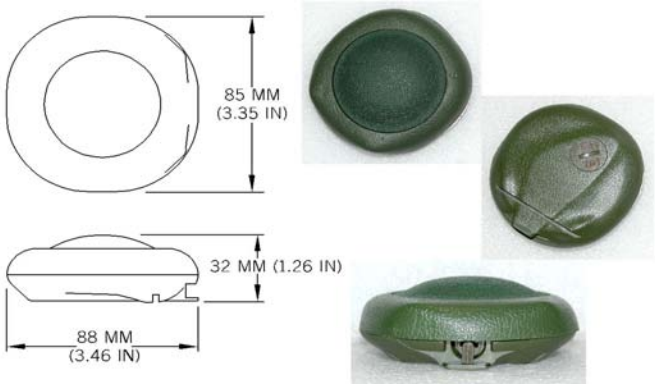

ITALIAN LANDMINE, APERS, ANTI-DISTURBANCE, SB-33/AR; PORTUGUESE M412; SPANISH P-5; AND GREEK EM-20

N.E.W. 17.00 G

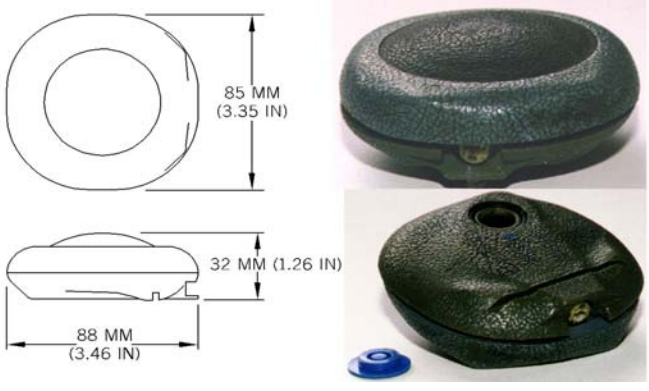

ITALIAN LANDMINE, APERS, SB-33; PORTUGUESE M412; AND SPANISH P-5

N.E.W. 36.00 G

EGYPTIAN LANDMINE, APERS, T/79

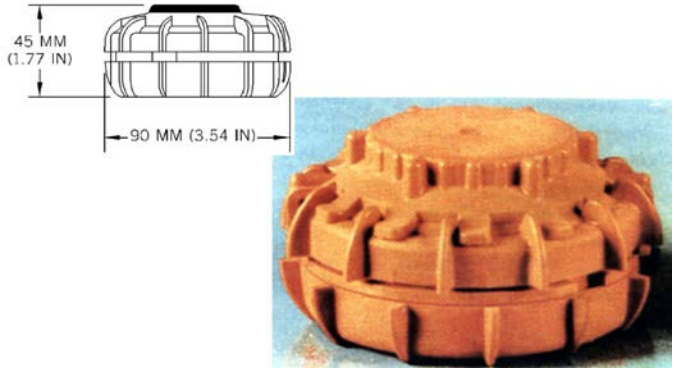

Ordnance used with:
VS-AR4, ANTILIFT DEVICE

N.E.W. 54.00 G

IRANIAN LANDMINE, APERS, YM-I

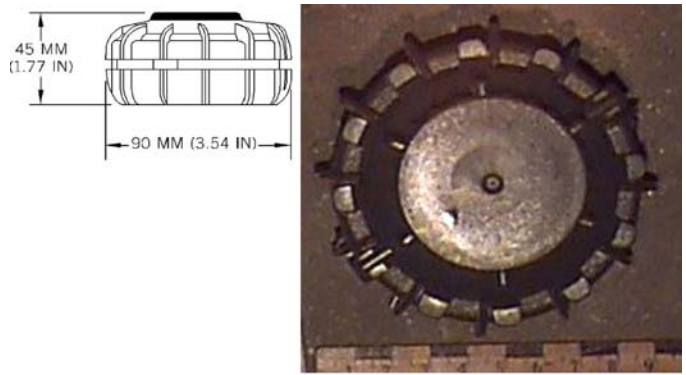

Ordnance used with:
VS-AR4, ANTILIFT DEVICE

N.E.W. 54.00 G

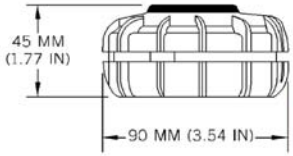

ITALIAN LANDMINE, APERS, VS-50; AND TRAINING

Ordnance used with:
VS-AR4, ANTILIFT DEVICE

N.E.W. 44.00 G

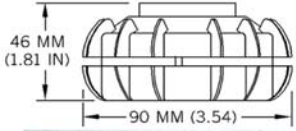

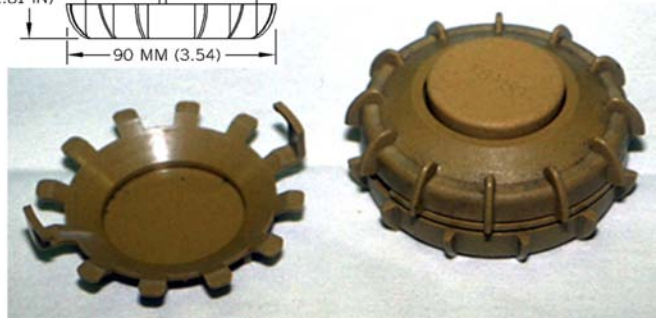

ITALIAN LANDMINES, APERS TS-50; AND TRAINING

Ordnance used with:
VS-AR4, ANTILIFT DEVICE

N.E.W. 54.00 G

SINGAPORE LANDMINE; APERS, SPM-1

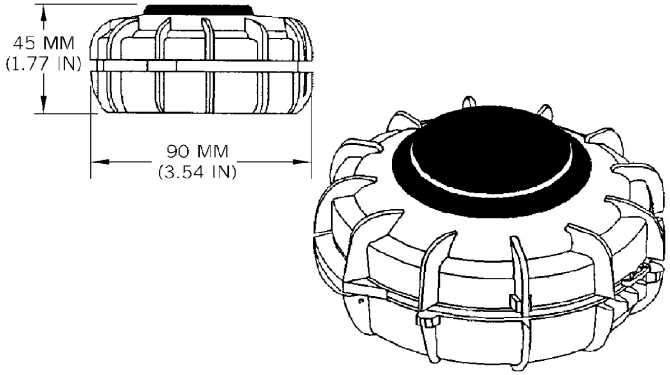

Ordnance used with:
VS-AR4, ANTILIFT DEVICE

N.E.W. 44.00 G

U.S. BOMB UNIT, FRAG, BLU-61A/B

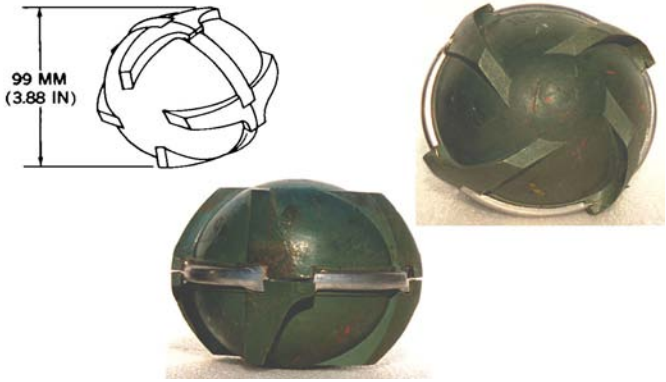

Ordnance used with:
SUU-30B/B, DISPENSER
SUU-30H/B, DISPENSER
SUU-51B/B, DISPENSER, AIRCRAFT
CBU-52B/B
M219A1, FUZE, IMPACT
M219E1, FUZE, IMPACT FIRED
CBU-76/B

N.E.W. 278.40 G

U.K. LANDMINE, AREA DENIAL, HB876

Ordnance used with:
NO. 2 MK 1, DISPENSER
JP233, AIRFIELD ATTACK WEAPON SYSTEM

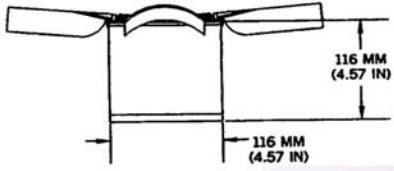

YUGOSLAV MINE, ANTITANK, ABABEEL/ABABEL/KPTM/KRTM,/YU-S-AT(MULTIPLE COUNTRY DEVELOPED MINE)

Ordnance used with:
ABABEL 50, 262MM, HE, M87

N.E.W. 700.00 G

U.S. LANDMINE, APERS, BLU-92/B (GATOR)

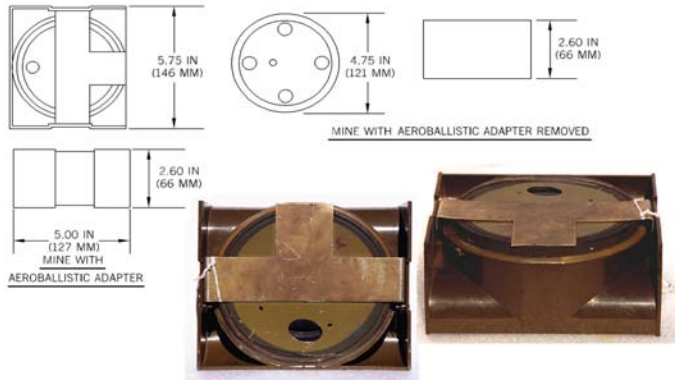

Ordnance used with:
MK 7 MOD 2, DISPENSER
MK 7 MOD 3, DISPENSER
MK 7 MOD 4, DISPENSER
MK 7 MOD 6, DISPENSER
SUU-58/B, DISPENSER
SUU-64/B, DISPENSER
CBU-89/B

N.E.W. 437.00 G

U.S. LANDMINE, AT/AV, BLU-91/B (GATOR)

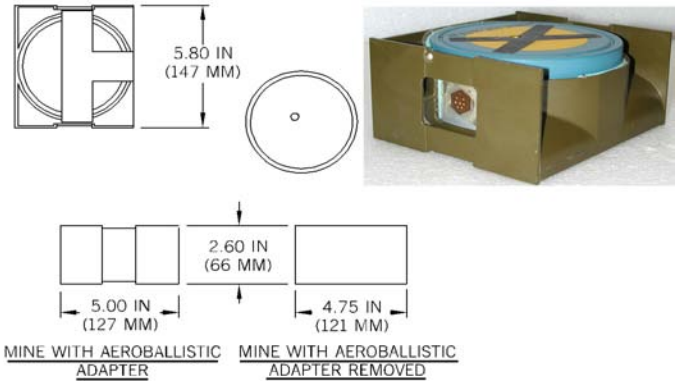

Ordnance used with:
MK 7 MOD 2, DISPENSER
MK 7 MOD 3, DISPENSER
MK 7 MOD 4, DISPENSER
MK 7 MOD 6, DISPENSER
SUU-58/B, DISPENSER
SUU-64/B, DISPENSER
CBU-89/B

N.E.W. 1.40 LB

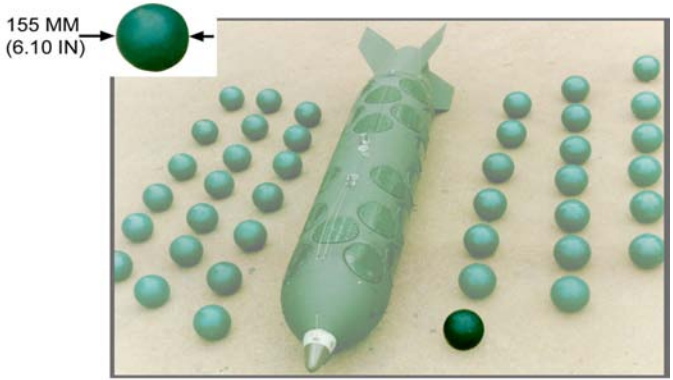

SOUTH AFRICAN BOMB, 6.20-KG, APERS, ALPHA

Ordnance used with:
CB 470, CLUSTER BOMB, 450 KG

N.E.W. 1.80 KG

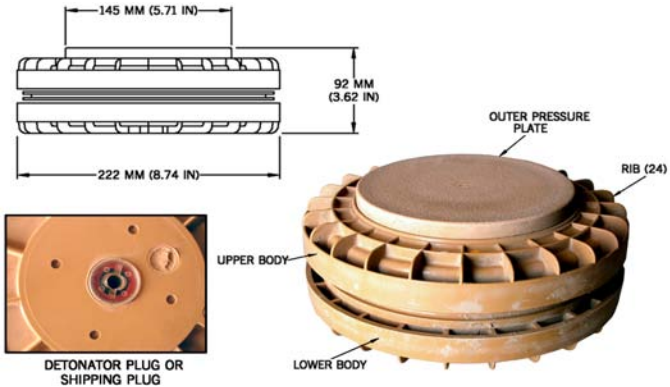

ITALIAN LANDMINE, AT, MODEL VS 1.6 MOD 1

Ordnance used with:
VS-AR4, ANTILIFT DEVICE

N.E.W. 1.92 KG

ITALIAN LANDMINE, AT, VS-2.2 (TYPE 2)

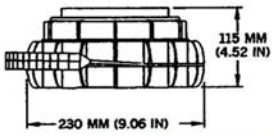

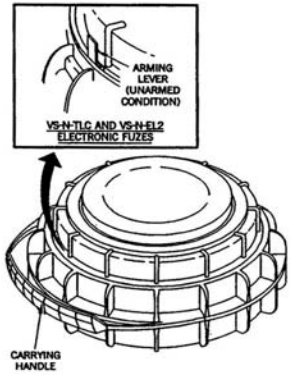

Ordnance used with:
VS-AR4, ANTILIFT DEVICE
VS-N-TLC, ELECTRONIC, FIELD PGM, R/C PRESS.-ACTUATED
VS-N-EL2, ELECT., FIELD PGM, PRESS./ANTIDISTURBANCE
VS-N/AR-AN, ELECTRONIC, ANIT-REMOVAL/DISTRUBANCE
VS-N, PRESSURE-ACTUATED

N.E.W. 2.27 KG

ITALIAN LANDMINE, AT, MODEL VS 1.6

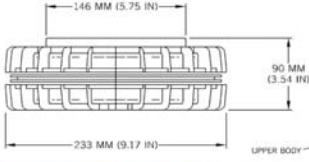

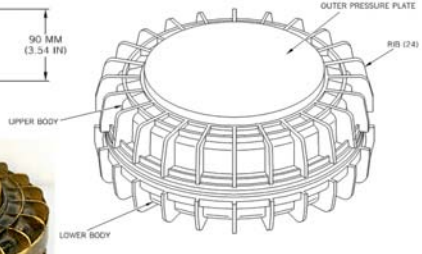

Ordnance used with:
VS-AR4, ANTILIFT DEVICE
MODEL UNKNOWN, DETONATOR, STAB

N.E.W. 1.92 KG

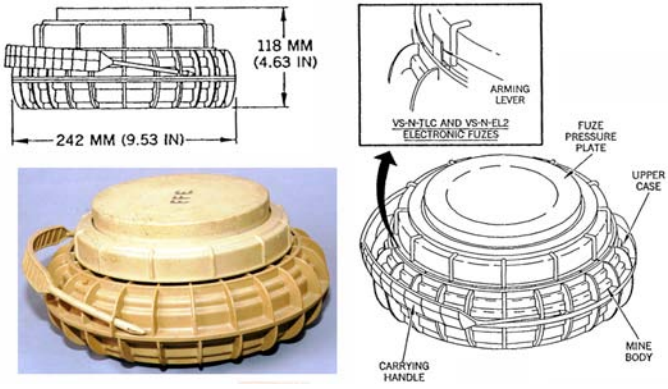

ITALIAN LANDMINES, AT, VS-2.2 TYPE 1

Ordnance used with:
VS-AR4, ANTILIFT DEVICE
VS-N-TLC, ELEC., FIELD PGM, R/C PRESSURE-ACTUATED
VS-N-EL2, ELEC., FIELD PGM, PRESS./ANTIDISTURBANCE
VS-N/AR-AN, ELECTRONIC, ANIT-REMOVAL/DISTRUBANCE
VS-N, PRESSURE-ACTUATED

N.E.W. 2.17 KG

U.K. BOMB RUNWAY PENETRATOR, 26-KG, NO. 1 MK 1 (SG-357)

Ordnance used with:
NO. 1 MK 1, DISPENSER
JP233, AIRFIELD ATTACK WEAPON SYSTEM

U.S.S.R. LANDMINE, APERS, POM-2S

Ordnance used with:
9M18, 122 MM, MINE DISPENSING, APERS
PKM, PORTABLE LANDMINE DISPENSING SYSTEM
PKPI, DISPENSER, CAPTIVE, HELICOPTER MOUNTED
PKPI-1
UMZ, MULTI-PURPOSE MINE LAYER

U.S. BOMB UNITS, FAE, BLU-73/B (OBSOLETE) AND BLU-73A/B

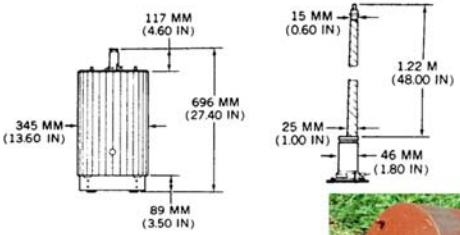

Ordnance used with:
SUU-49/B, DISPENSER
SUU-49A/B, DISPENSER
CBU-72/B
CBU-58A/B
CBU-55A/B
FMU-95/B, IMPACT

N.E.W. 368.00 G