U.S.S.R. NAVAL MINE, SHALLOW-WATER, MOORED, CONTACT, YARM

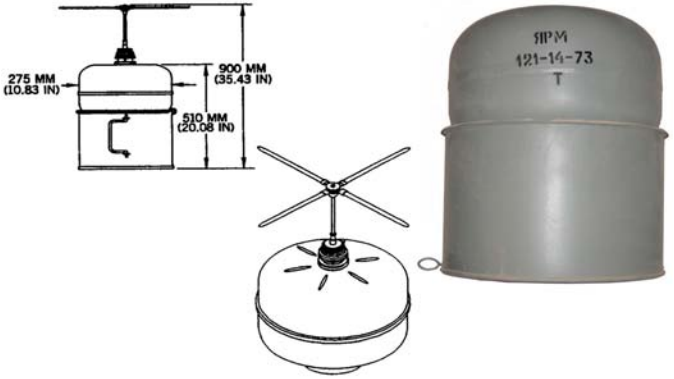

Ordnance used with:
VRM, TILTROD, STIKER RELEASE

N.E.W. 3.03 KG

EGYPTIAN NAVAL MINES, MOORED, CONTACT, SHALLOW WATER

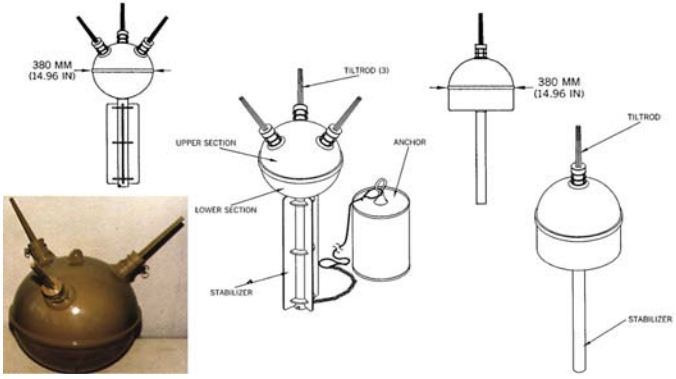

N.E.W. 18.00 KG

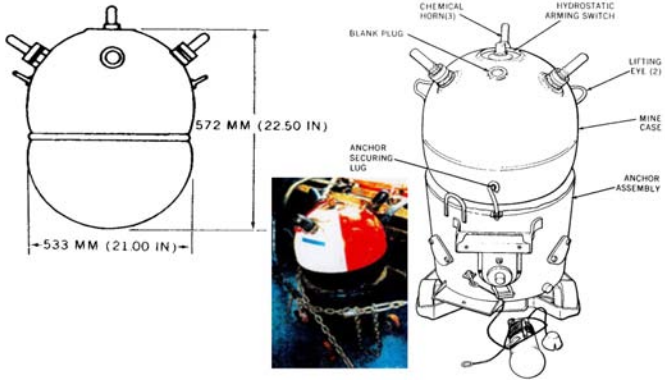

U.S.S.R. NAVAL MINE, CONTACT MYAM, (IRAQI AL MARA) (IRANIAN SADAF-01)

N.E.W. 43.00 LB

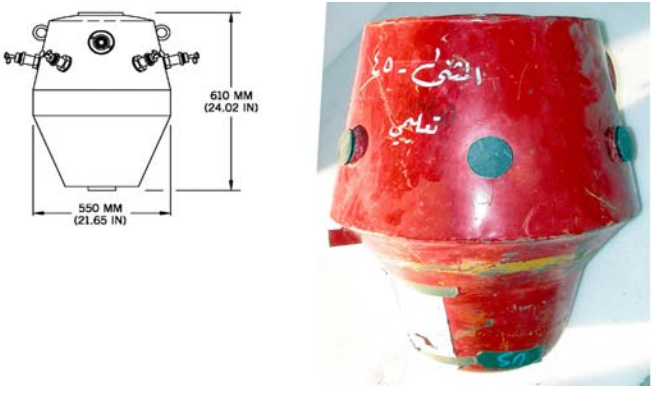

IRAQI NAVAL MINE, MOORED/DRIFTING, CONTACT, AL-MUTHENA/35

N.E.W. 35.00 KG

IRAQI NAVAL MINE, MOORED/DRIFTING, CONTACT, AL-MUTHENA/45

N.E.W. 45.00 KG

MODEL UNKNOWN, DRIFTING CONTACT, IMPROVISED

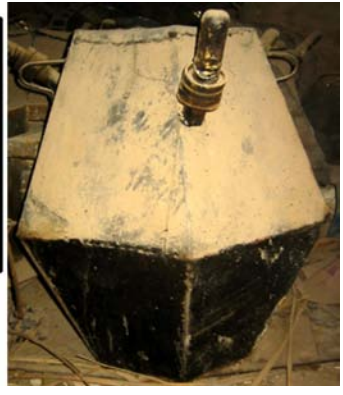

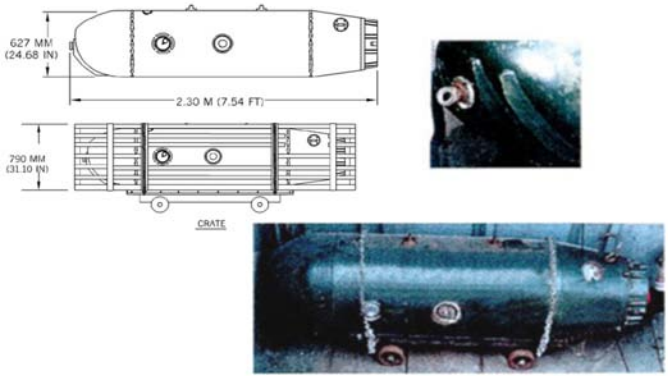

U.S.S.R. NAVAL MINE, BOTTOM, ACOUSTIC-INFLUENCE, UDM

N.E.W. 645.35 KG

IRAQI NAVAL MINE, MOORED, CONTACT, TAHADDI

U.S.S.R. NAVAL MINE, MOORED, CONTACT, M-08

U.S.S.R. NAVAL MINE, MOORED, CONTACT, MKB

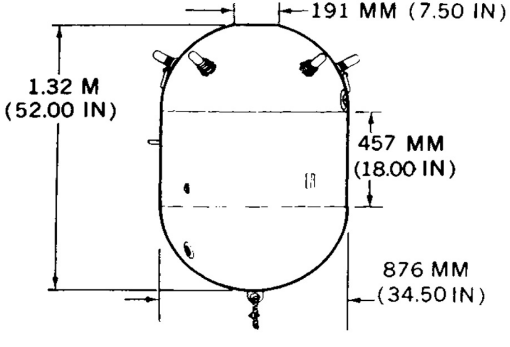

Ordnance used with:
ANTIPARAVANE DEVICE

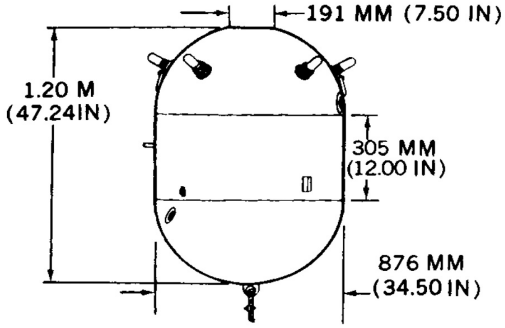

U.S.S.R. NAVAL MINE, MOORED, CONTACT, MKB-3

Ordnance used with:
ANTIPARAVANE DEVICE

IRAQI NAVAL MINE, BOTTOM, INFLUENCE SIGEEL/400

N.E.W. 400.00 KG

ITALIAN NAVAL MINE, BOTTOM, INFLUENCE, MANTA

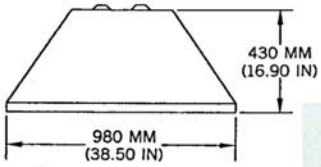

N.E.W. 180.00 KG

IRAQI DEMOLITION MINE, ALKAAKAA/16

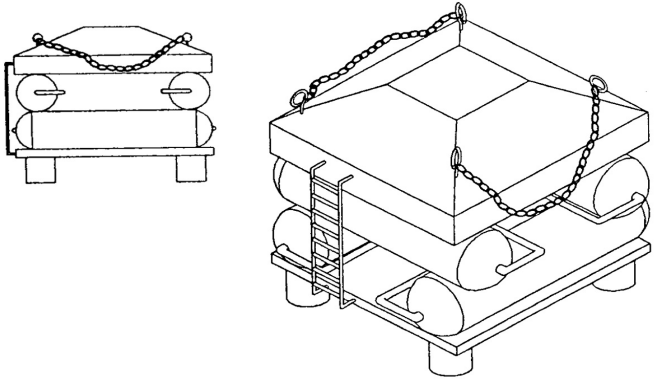

N.E.W. 26000.00 LB