SWEDISH LAUNCHER FOR 84-MM, HEAT, MODEL AT-4 CARTRIDGE

Ordnance used with:
AT-4, CARTRIDGE, 84-MM HEAT
M136

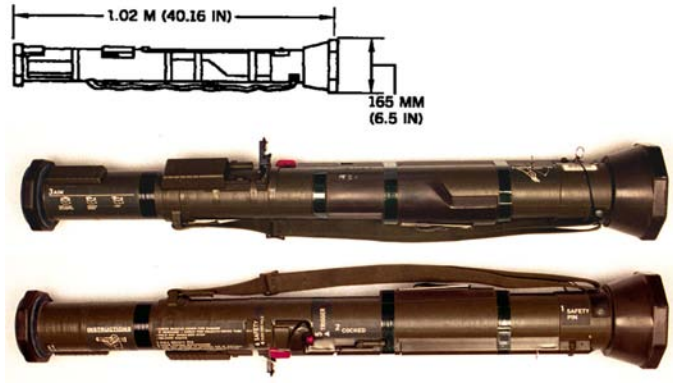

U.S.S.R. DISPENSER, BKF PTAB-2.5 KO, SUBMUNITION CONTAINER UNIT

Ordnance used with:
KMGU
KMGU-2, DISPENSER, CAPTIVE
PTAB-2.5 KO, BOMB, HEAT/FRAG

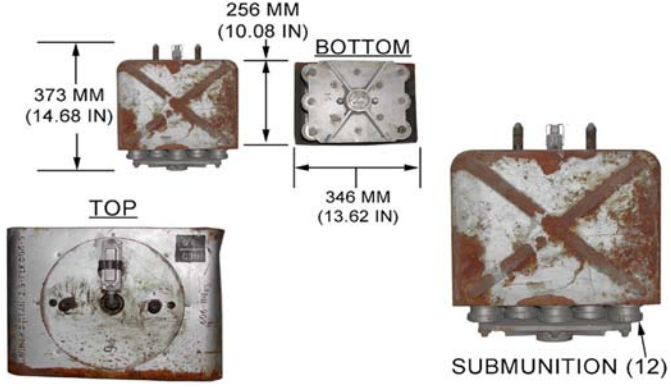

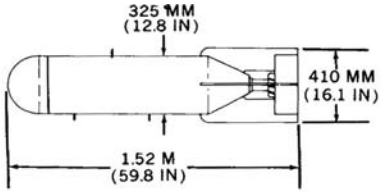

CHINESE DISPENSER, 250-KG, TYPE 2

Ordnance used with:
TYPE 1, BOMB, 2-KG, HEAT
TYPE 1, BOMB, 5 KG, FRAG
HANG-YIN-4B
HANG-YIN-4C

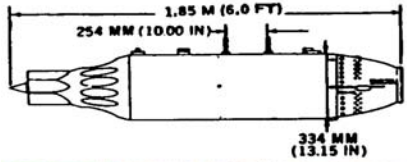

U.S.S.R. LAUNCHER, 57-MM ROCKET, UB-16-57-U

Ordnance used with:
C-5K, 57-MM, HEAT, AIR-TO-SURFACE
S-5K, 57-MM, HEAT, AIR-TO-SURFACE
S-5M, 57-MM, HE, AIR-TO-SURFACE
V-5K, ROCKET, PD, AIR-TO-SURFACE
V-5M1, ROCKET, PDSD
S-5K1, 57-MM, HEAT, AIR-TO-SURFACE
S-5M1, 57-MM, HE-FRAG, AIR-TO-SURFACE

U.S. BOMB, CLUSTER, GUIDED ROCKEYE MUNITION (GRM)

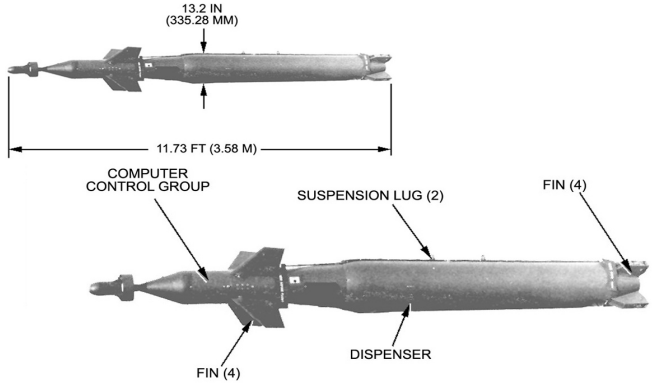

Ordnance used with:
FMU-56B/B, BOMB FUZE, PROXIMITY
MK 7 MOD 2, DISPENSER
BOMB, AT, MK 118 MOD 0, ROCKEYE
BOMB, AT, MK 118 MOD 1, ROCKEYE
KMU-388/B, LASER GUIDANCE KIT,

N.E.W. 245.00 LB

U.S. CLUSTER BOMB UNIT, MK 20 MOD 10

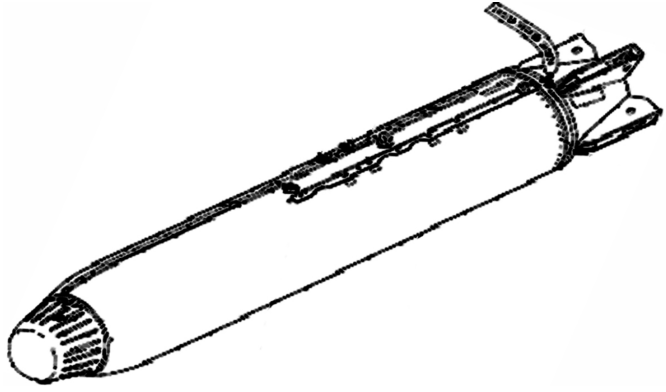

Ordnance used with:
FMU-140/B, NOSE, PROXIMITY
BOMB, AT, MK 118 MOD 0, ROCKEYE
MK 7 MOD 10, DISPENSER

N.E.W. 18.50 G

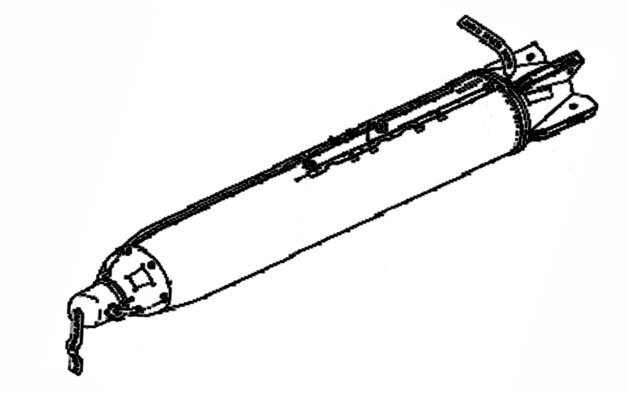

U.S. CLUSTER BOMB UNIT, MK 20 MOD 7 (ROCKEYE)

Ordnance used with:
MK 339 MOD 1, MT
BOMB, AT, MK 118 MOD 0, ROCKEYE
MK 7 MOD 7, DISPENSER

N.E.W. 18.50 G

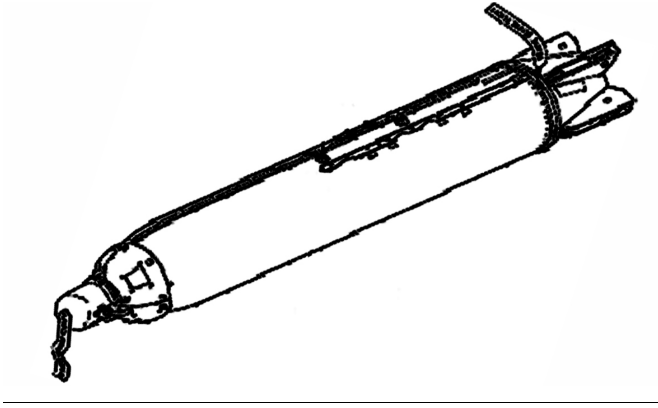

U.S. CLUSTER BOMB UNIT, MK 20 MOD 8

Ordnance used with:
MK 339 MOD 1, MT
BOMB, AT, MK 118 MOD 0, ROCKEYE
A-1, BRAZILIAN FIGHTER
AMX, ITALIAN FIGHTER
MK 7 MOD 8 DISPENSER
MK 7 MOD 12 DISPENSER

N.E.W. 18.50 G

U.S. CLUSTER BOMB UNIT, MK 20 MOD 9

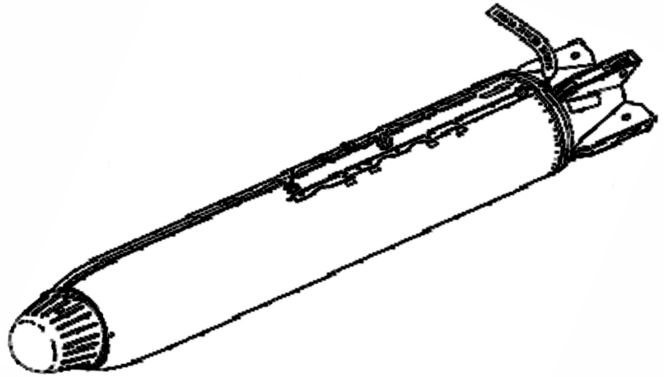

Ordnance used with:
FMU-140/B, NOSE, PROXIMITY
BOMB, AT, MK 118 MOD 0, ROCKEYE
MK 7 MOD 9, DISPENSER

N.E.W. 18.50 G

U.S. DISPENSER, LEAFLET, PDU-5/B

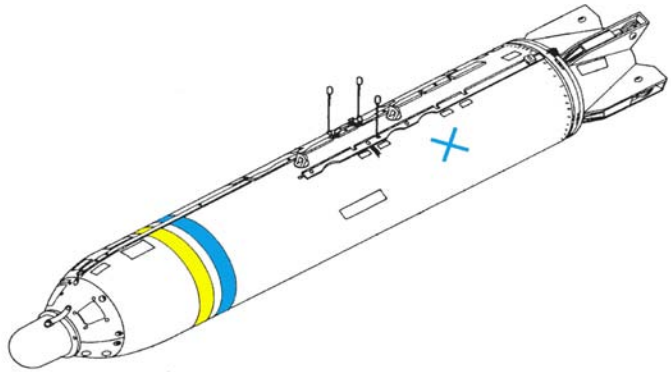

Ordnance used with:
MK 339 MOD 0, MT
MK 339 MOD 1, MT
MK 7 MOD 3, DISPENSER
SUU-76C/B

N.E.W. 27.90 G

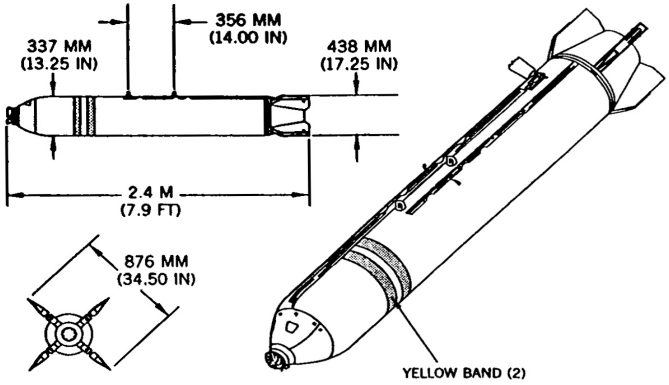

U.S. DISPENSER, SUU-58/B

Ordnance used with:
FMU-140/B, NOSE, PROXIMITY
MK 339 MOD 0, MT
MK 339 MOD 1, MT
MK 7 MOD 6, DISPENSER
BLU-91/B, BOMB, AT/AV
GATOR
BLU-92/B, BOMB, APERS

N.E.W. 19.00 G

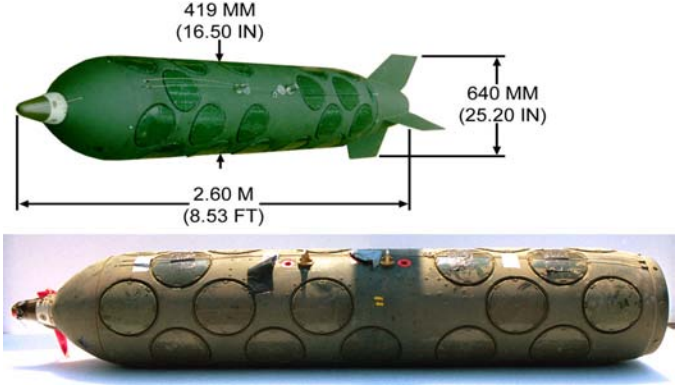

SOUTH AFRICAN BOMB UNIT, CLUSTER, 450-KG, CB470

Ordnance used with:
A-1, BRAZILIAN FIGHTER
AMX, ITALIAN FIGHTER
ALPHA, BOMB, 6.2 KG
ALPHA, SUBMUNITION
JUPITER 6, BOMB, NOSE, PROXIMITY (ASERMA)

N.E.W. 52.80 KG

U.S. DISPENSER, SUU-49A/B

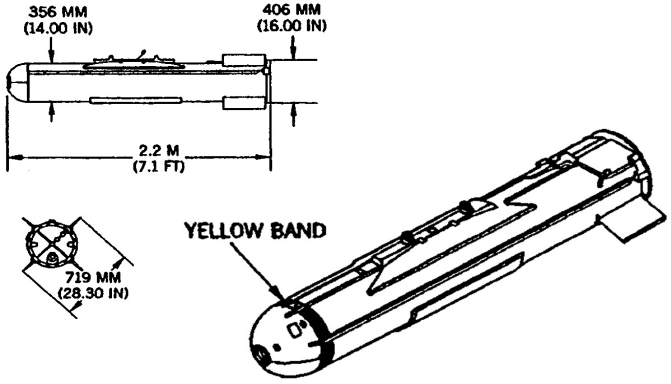

Ordnance used with:
FMU-83/B, BOMB FUZE, MT
MK 339 MOD 0, MT
MK 339 MOD 1, MT
BLU-73A/B, BOMB, FAE
BLU-98/B, BOMB, SMOKE
CBU-72/B
CBU-55A/B

N.E.W. 35.00 G

U.S. CLUSTERS, CLUSTER BOMBS, AND CLUSTER BOMB UNIT (CBU) SYSTEMS; CBU-58A/B, 58/B, 71A/B, 71/B

Ordnance used with:
MK 339 MOD 0, MT
MK 339 MOD 1, MT
SUU-30H/B, DISPENSER
BLU-63/B, BOMB, FRAG
BLU-73A/B, BOMB, FAE
BLU-86A/B, BOMB, FRAG

N.E.W. 158.00 LB

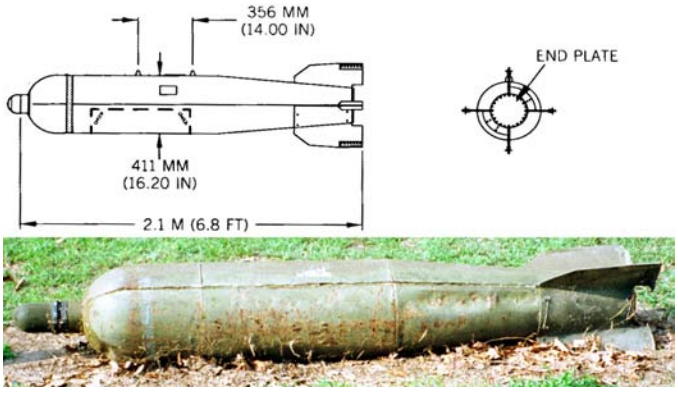

U.S. DISPENSER, SUU-30B/B

Ordnance used with:
FMU-105A/B, PROXIMITY
FMU-110/B, NOSE, PROXIMITY
FMU-26/B, BOMB FUZE, NOSE & TAIL, MULTIPURPOSE
FMU-26A/B, BOMB FUZE, NOSE & TAIL, MULTIPURPOSE
FMU-26B/B, BOMB FUZE, NOSE & TAIL, MULTIPURPOSE
FMU-56/B, PROXIMITY
FMU-56A/B, PROXIMITY

N.E.W. 0.00 G

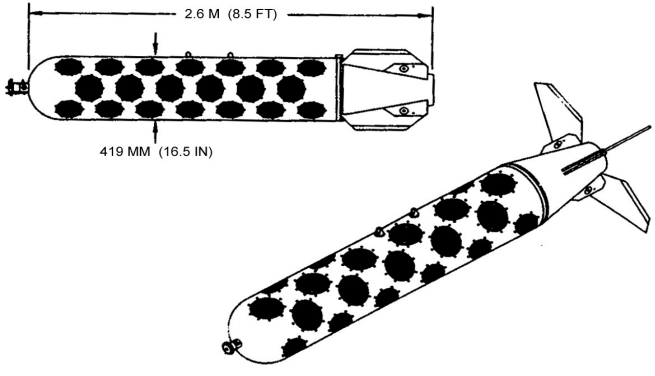

IRAQI BOMB, CLUSTER, MODEL UNKNOWN

Ordnance used with:
EEA III, BOMB, NOSE, ELECTRONIC TIME (ET)

UNKNOWN COUNTRY DISPENSER, TYPE AND MODEL UNKNOWN

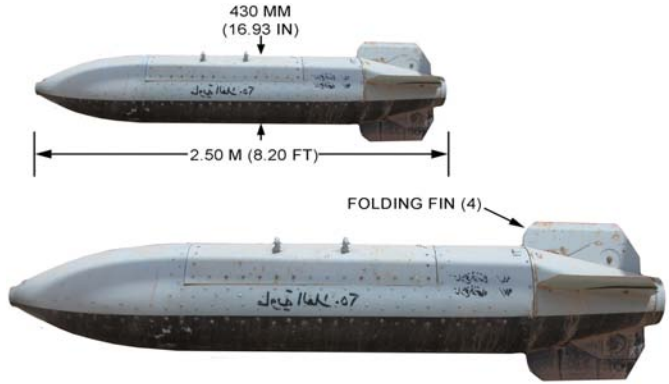

UNKNOWN COUNTRY DISPENSER, TYPE AND MODEL UNKNOWN

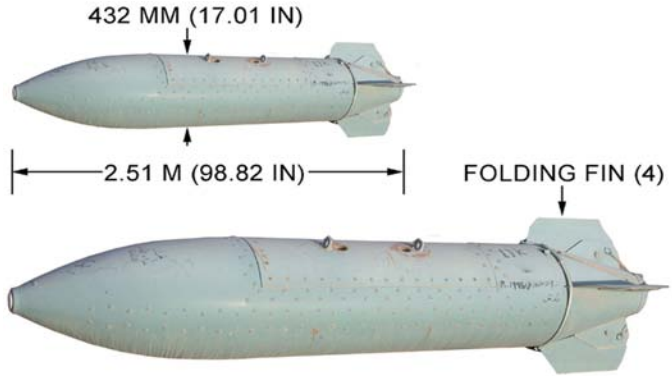

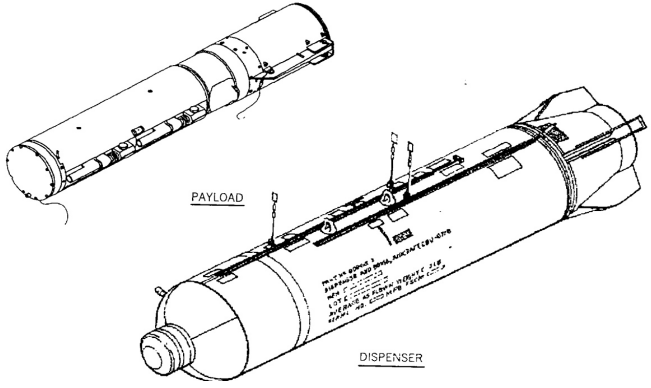

TYPICAL CLUSTER, CLUSTER BOMB, OR CBU SYSTEM

Ordnance used with:
MK 339 MOD 1, MT
MK 7 MOD 2, DISPENSER
SUU-49A/B, DISPENSER
SUU-58/B, DISPENSER
SUU-64/B, DISPENSER
BLU-108/B, BOMB, (SENSOR FUZED WEAPON)
BLU-73A/B, BOMB, FAE

N.E.W. 100.00 LB

U.S. CLUSTERS, CLUSTER BOMBS, AND CLUSTER BOMB UNIT (CBU) SYSTEMS; MK 20 MOD 3, 4, & 6 CB

Ordnance used with:
MK 339 MOD 0, MT
MK 339 MOD 1, MT
MK 7 MOD 3, DISPENSER
MK 7 MOD 4, DISPENSER
MK 7 MOD 6, DISPENSER
MK 118, VECP MODIFIED, (ROCKEYE)
BOMB, AT, MK 118 MOD 0, ROCKEYE

N.E.W. 100.00 LB

U.S. DISPENSERS, MK 7 MODS 2, 3, 4 & 6

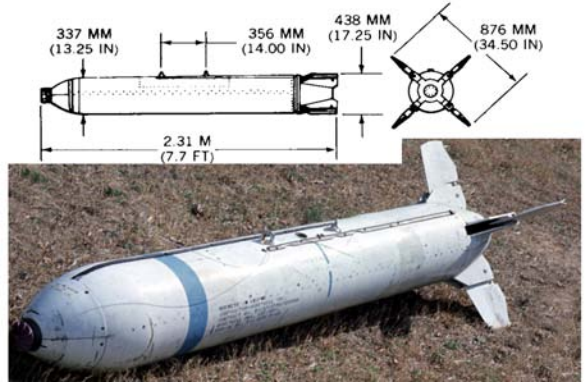

Ordnance used with:
FMU-140/B, NOSE, PROXIMITY
FMU-56B/B, BOMB FUZE, PROXIMITY
MK 339 MOD 0, MT
MK 339 MOD 1, MT
BLU-77/B, BOMB UNIT, HEAT-FRAG
BLU-91/B, BOMB, AT/AV
GATOR

N.E.W. 18.50 G

CHILEAN BOMB, CLUSTER, CB-500-LB, CB-500-K

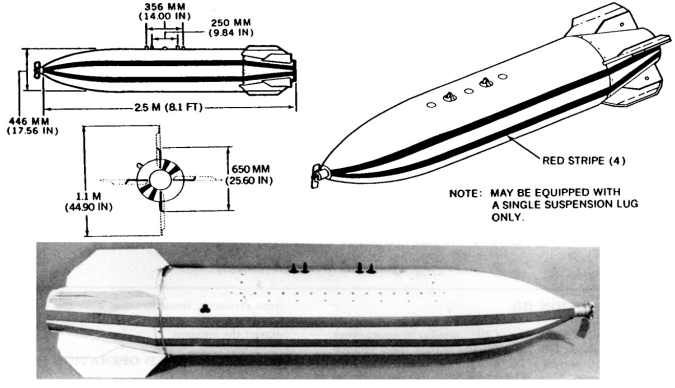

Ordnance used with:
CTBF-1, BOMB, NOSE, TIME DELAY
UNKNOWN, 1.6 LB, SUBMUNITION
PM-1, BOMB, HEAT/APERS, INCENDAIRY
EEA III, BOMB, NOSE, ELECTRONIC TIME (ET)
EEA II, BOMB, NOSE, ELECTRONIC TIME (ET)

U.S.S.R. LAUNCHER, MODEL UB-32A1

Ordnance used with:
S-5KO, 57-MM, WARHEAD, HEAT-FRAG, AIR-TO-SURFACE
S-5KPB, 57-MM, HEAT/FRAG, AIR-TO-SURFACE
S-5M, 57-MM, HE, AIR-TO-SURFACE
S-5KP, 57-MM, HEAT/FRAG, AIR-TO-SURFACE

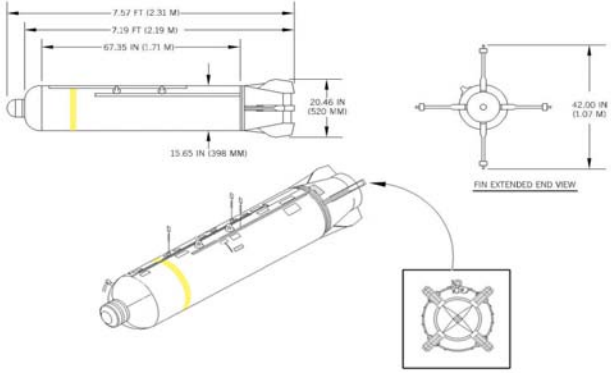

U.S. DISPENSER, WIND CORRECTED MUNITIONS DISPENSER (WCMD), SUU-66/B

Ordnance used with:
BLU-108/B, BOMB, (SENSOR FUZED WEAPON)
BLU-108A/B, BOMB, (SENSOR FUZED WEAPON)
BLU-108 (D-4)/B (SENSOR FUZED WEAPON - TEST UNIT)
CBU-105/B (WCMD)
CBU-105A/B (WCMD)
FZU-39/B, PROXIMITY SENSOR, CBU
BLU-108B/B, BOMB, HE, (SENSOR FUZED WEAPON)

N.E.W. 106.00 LB

IRAQI BOMB, CLUSTER, 250-KG, NAAMAN-250

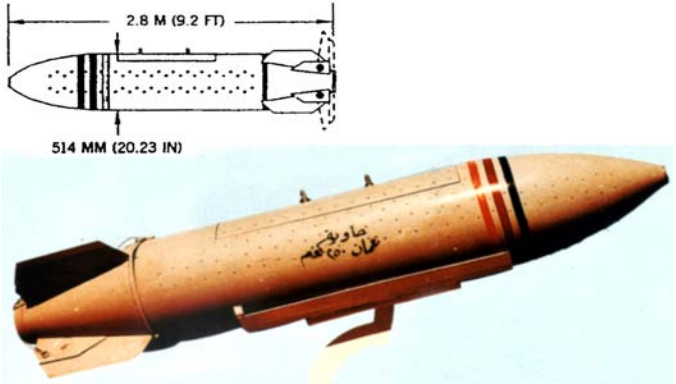

U.S. AIRCRAFT WIND-CORRECTED MUNITIONS DISPENSER, SUU-64/B

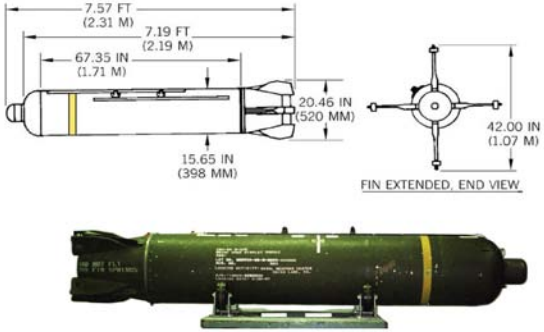

Ordnance used with:
BLU-91/B, BOMB, AT/AV
GATOR
BLU-92/B, BOMB, APERS
GATOR
CBU-89/B
CBU-89A/B
FZU-39/B, PROXIMITY SENSOR, CBU

N.E.W. 116.00 LB

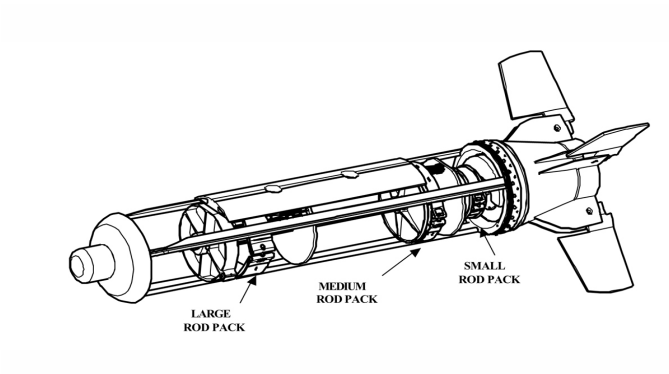

U.S. CLUSTER BOMB UNIT PASSIVE ATTACK WEAPON (PAW) CBU-107/B

Ordnance used with:
SUU-66/B, DISPENSER (WCMD)
UNDESIG TUNGSTEN ROD ASSY, 0.590-INCH, INERT, LARGE
UNDESIG TUNGSTEN ROD ASSY, 0.375-INCH, INERT, SMALL
UNDESIG STAINLESS STEEL ROD ASSY, INERT, SMALL
UNDESIG STAINLESS STEEL ROD ASSY, INERT, LARGE

N.E.W. 1.00 LB

U.S. CLUSTERS, CLUSTER BOMBS, AND CLUSTER BOMB UNIT (CBU) SYSTEMS; CBU-87/B & 89A/B

Ordnance used with:
SUU-64/B, DISPENSER
SUU-65/B, DISPENSER
BLU-91/B, BOMB, AT/AV
GATOR
BLU-92/B, BOMB, APERS
GATOR
BLU-97/B, BOMB FRAG/ HEAT

N.E.W. 116.10 LB

U.S. DISPENSER, AIRCRAFT, SUU-65/B

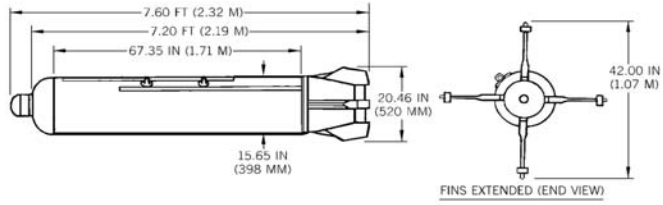

Ordnance used with:
BLU-97/B, BOMB FRAG/ HEAT
BLU-97A/B, BOMB, FRAG/HEAT
CBU-87/B
CBU-87A/B
CBU-87B/B
FZU-39/B, PROXIMITY SENSOR, CBU
BLU-114/B, SUBMUNITION, ANTI-ELECTRICAL

N.E.W. 12.00 OZ

U.S.S.R. LAUNCHER, ROCKET, 20-SHOT, B-8M

Ordnance used with:
S-8K0M, 80-MM, HEAT/FRAG, AIR-TO-SURFACE
S-8KO, 80-MM, HEAT/FRAG, AIR-TO-SURFACE
S-8ASM, 80-MM, FLECHETTE, AIR-TO-SURFACE
S8ASM, 80-MM, FLECHETTE, AIR-TO-SURFACE

U.S.S.R. LAUNCHER, ROCKET, 20-SHOT, B-8V20-A

Ordnance used with:
S-8K0M, 80-MM, HEAT/FRAG, AIR-TO-SURFACE
S-8KO, 80-MM, HEAT/FRAG, AIR-TO-SURFACE
S-8ASM, 80-MM, FLECHETTE, AIR-TO-SURFACE
S8ASM, 80-MM, FLECHETTE, AIR-TO-SURFACE